nexe

ROOF TILES

2025

100 GODINA KVALITETE

50 year warranty

There is a regular guarantee of the high quality of the roof tiles, but also a **50-year warranty** that comes with the whole roof system NEXE KROV PLUS roof equitpment!

Adaptability and the perfect response to the market needs

(Whether in the continental or coastal area, it's the roof tile of your choice)

The roof is the "head of the house" – an element that shapes the appearance of the building but also ensures its longevity and safety. By choosing Nexe roof tiles, all these criteria are met, whether the roof is located in a continental or coastal area. A good roof covering must be durable in all weather conditions, waterproof, easy to install and maintain, and, at the same time, it must be easy to build and environmentally friendly. Clay tile, as the most widely used material for roofing, possesses exactly these optimal characteristics.

The range of Nexe tiles consists of the large-format models Cezar, Valens, Aurelius, and Oktavijan, as well as the small-format tiles Mediteran, Kupa Marea, Glinex Premium, Glinex Continental, Glinex Rustik, and Biber.
For the continental area, the Caesar, Valens, and Aurelius models are especially recommended because their size reduces construction costs, speeds up installation, and allows sliding lathing, making them an excellent choice for both new buildings and the reconstruction of existing ones. The Glinex line, with the Premium, Continental and Rustik models, is characterized by superior sealing properties and represents a combination of tradition and modern achievements in the production of roof coverings.

For the restoration of old roofs on buildings that have significant cultural value, as well as for contemporary architecture projects, the timeless Biber model imposes itself as an ideal choice thanks to its classic, recognizable shape.

In the coastal area, where wind gusts and weather conditions are particularly challenging, Nexe recommends its corrugated models. Mediterranean, Kupa Marea and large-format corrugated tiles Oktavijan are designed to aesthetically fit perfectly into the traditional architecture of that region, while their large waves and reinforced seals ensure resistance to bora and other demanding climatic conditions.

In this way, Nexe tile offers solutions that combine durability, functionality and aesthetics and ensure an optimal choice regardless of whether a new building is being built, an existing one is being reconstructed or a historic building is being rehabilitated.

Nexe roof tiles

—

to make the house a home

Our 100 years for your **100 years of living comfort**

—

iSnce 1922, numerous generations have been creating the brand name of the roof tile from Vinkovci. The launch of the renowned Bohn brickyard in 1922 marked the beginning of what would later, in 1961, become Dilj - a company that soon grew into a source of pride for the town and this part of Slavonia. Today, the company has approximately 300 employees. Nexe roof tiles protect the buildings in Croatia, Bosnia and Herzegovina, Serbia, Montenegro, Ukraine, Hungary, Slovenia, Kosovo, Albania, Bulgaria, Romania, and Austria.

Since 2002, the company has been part of the Nexe Group. Thanks to numerous investments in the last decade, the company has achieved a level of quality that conforms to all European criteria and possesses state-of-the-art technology to produce top-quality roof tiles and bricks.

A blend of tradition **and high quality**

The blend of construction tradition, top-quality raw materials, along with their durability and timeless design, puts Dilj tiles from Vinkovci at the very top of the global market. Nexe roof tiles provide high-quality solutions, because your home is not just four walls and a roof, but also a space of supreme comfort. We understand that quality comes first.

We take pride in our expertise, innovation, continuous improvement, well-thought-out design, and a wide assortment, thanks to which our products proudly cover the roofs all over Europe.

The roof for all times and weathers

The buildings we live in need a safe roof that can endure everything. The roof is a part of a house that endures the most, due to being directly exposed to rain, wind, ice, snow, hail, and other challenges. A high-quality roof has to withstand all weather conditions, be waterproof, lasting, be easy to install, and be easy to maintain. Furthermore, it also needs to be easily reconstructed and be environmentally friendly.

The numerous awards and certificates we have earned stand as proof of our quality, reflecting a century-long tradition, environmental responsibility, and commitment to sustainable growth.

Bigger forms – **lower costs**

The quality and design of the large-format roof tiles represent a unique combination for the roof. The main feature of the roof tile is its size (10 pieces/m2), which hugely impacts the amount of material and the installation time, resulting in better cost-efficiency.

The well-thought-out geometry makes a roof tile with a large moving area and excellent sealing properties, thus enhancing both its safety and versatility of use.

nexe ROOF TILES

Aurelius 01

Aurelius, our clay emperor, is a large-format tile that combines top technical properties with contemporary design. Available in elegant matt black and matt brown, these variants will bring a distinctive charm and character to any roof. With its advanced technical properties, most notably the double sealing system, it guarantees outstanding waterproofing and weather resistance. The 4 cm sliding batten system allows simple adaptation for new builds, as well as roof refurbishments. For Aurelius, a tile built to last, all the special elements needed for perfect coverage are also available, making it the ideal solution for all those looking for a modern, reliable, and long-lasting roof.

50 year warranty

01

EN 1304

Aurelius Black Matte

Aurelius Brown Matte

Nail-holes	yes
Nail head rivets (mm)	cca 4x50
Average mass of roof tile (kg)	cca 4.1
Roof tile consumption per m2 of roof (piece)	cca 10
Roof load (kg/m2)	cca 41
Roof load (kN/m2)	cca 0.41
Coverage dimensions (mm)	cca 390x250
First batten placement – eaves (mm)	cca 350
Recommended gap between battens (mm)	cca 400
Minimum gap between battens (mm)	cca 360
Maximum gap between battens (mm)	cca 400
Recommended covering width (mm)	cca 250
Batten consumption (m'/m2)	cca 2.5
Counter batten consumption (m'/m2)	cca 1.4
Package – 4 rows (piece/pallet)	240
Roof tiles per package (piece)	6
Pallet dimensions (mm)	cca 1100x965
Package weight (kg)	cca 1000
Recommended roof slope	30°
Minimum roof slope	cca 22°
Minimum roof slope (with substructure)	cca 17°

Carski
hip/ridge junction

Carski
starter verge tile

Carski verge tile

Carski
verge end cap

Carski
ridge starter

Vent tile

Right verge tile

Left verge tile

Cooker hood
vent connection

Antenna connection

Vinkovci rooster

nexe ROOF TILES

Cezar 02

Large-format roof tiles are especially designed for the mainland areas. The features of this roof tile are a big moving area (up to 5 cm) and an excellent sealing system (double seal system), which increases the safety and variety of use. The main feature of the roof tile is its size (10 pieces/m2), which hugely impacts the amount of material and the installation time, resulting in better cost-efficiency. You can choose among the following colours: natur, red, black lux, brown lux, and anthracite.

50 year warranty

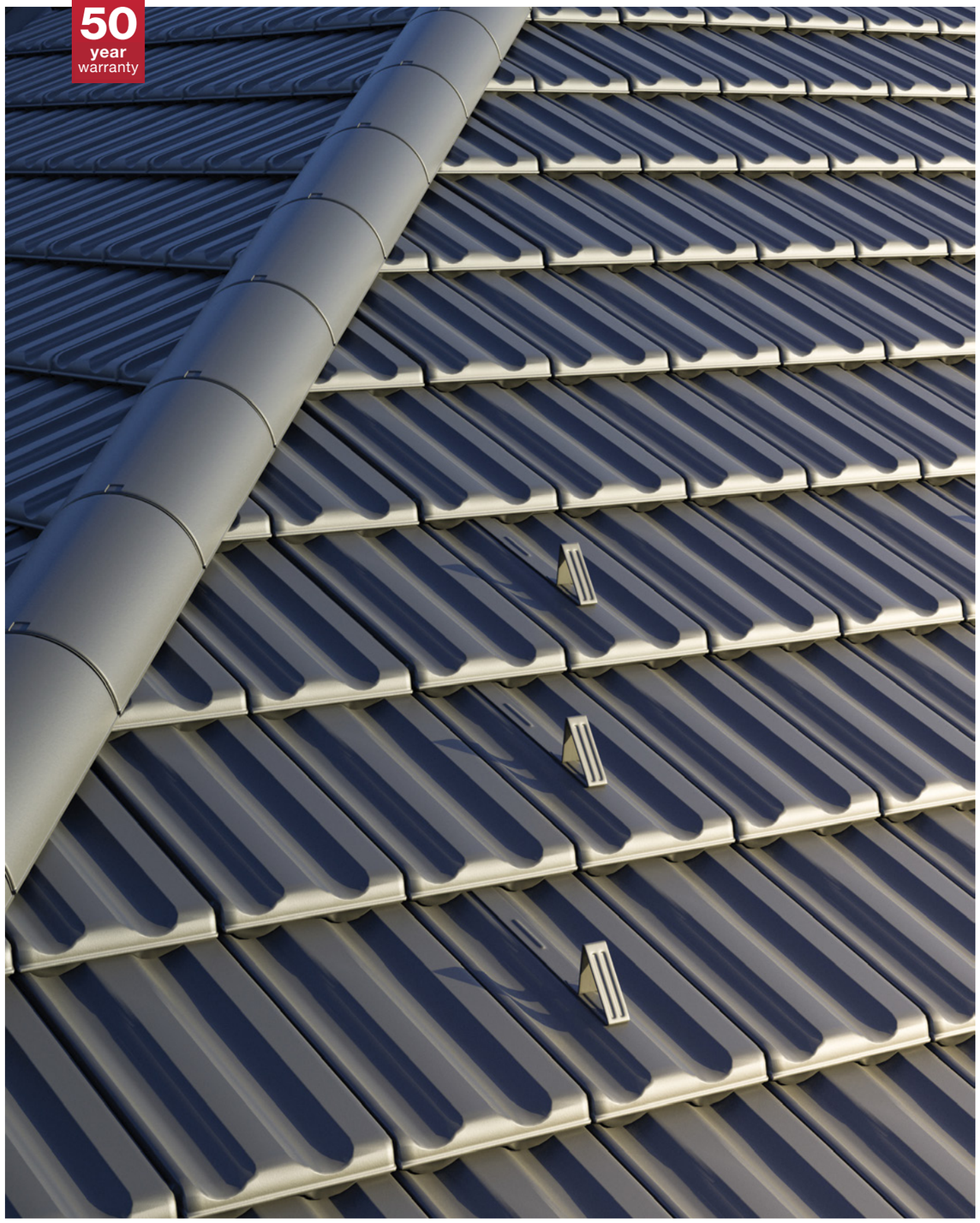

02

Cesar Natur Engobe

Cezar Red

Cezar Brown Lux

Cezar Anthracite

Cezar Black Lux

EN 1304

Nail-holes	yes
Nail head rivets (mm)	cca 4x50
Average mass of roof tile (kg)	cca 4.0
Roof tile consumption per m2 of roof (piece)	cca 10
Roof load (kg/m2)	cca 40
Roof load (kN/m2)	cca 0.40
Coverage dimensions (mm)	cca 410x250
First batten placement – eaves (mm)	cca 350
Recommended gap between battens (mm)	cca 400
Minimum gap between battens (mm)	cca 350
Maximum gap between battens (mm)	cca 400
Recommended covering width (mm)	cca 250
Batten consumption (m'/m2)	cca 2.5
Counter batten consumption (m'/m2)	cca 1.4
Package – 4 rows (piece/pallet)	240
Roof tiles per package (piece)	5
Pallet dimensions (mm)	cca 1100x965
Package weight (kg)	cca 980
Recommended roof slope	30°
Minimum roof slope	cca 22°
Minimum roof slope (with substructure)	cca 17°

Carski hip/ridge junction

Carski starter verge tile

Carski verge tile

Carski verge end cap

Carski ridge starter

Vent tile

Right verge tile

Left verge tile

Half a tile

Cooker hood vent connection

Antenna connection

Vinkovci rooster

nexe ROOF TILES

Oktavijan 03

Oktavijan, a really large-format imperial roof tile, with its quality and design, gives the roof a special and attractive appearance. It is suitable to both mainland and Mediterranean areas.

The main feature of the roof tile is its size (10 pieces/m2), which hugely impacts the amount of material and the installation time, resulting in better cost-efficiency. You can choose among these colours: natur, red, black lux, brown lux.

50 year warranty

03

HRN EN 1304

Nail-holes	yes
Nail head rivets (mm)	cca 4x50
Average mass of roof tile (kg)	cca 4.1
Roof tile consumption per m2 of roof (piece)	cca 10
Roof load (kg/m2)	cca 41
Roof load (kN/m2)	cca 0.41
Coverage dimensions (mm)	cca 400x250
First batten placement – eaves (mm)	cca 350
Recommended gap between battens (mm)	cca 400
Minimum gap between battens (mm)	cca 392
Maximum gap between battens (mm)	cca 405
Recommended covering width (mm)	cca 250
Batten consumption (m'/m2)	cca 2.5
Counter batten consumption (m'/m2)	cca 1.4
Package – 4 rows (piece/pallet)	240
Roof tiles per package (piece)	5
Pallet dimensions (mm)	cca 1100x965
Package weight (kg)	cca 1000
Recommended roof slope	30°
Minimum roof slope	cca 22°
Minimum roof slope (with substructure)	cca 17°

Oktavijan Natur Engoba

Oktavijan Red

Oktavijan Brown Lux

Oktavijan Black Lux

Carski hip/ridge junction

Carski starter verge tile

Carski verge tile

Carski verge end cap

Carski ridge starter

Vent tile

Right verge tile

Left verge tile

Under-verge tile

Right edge under-verge tile

Left edge under-verge tile

Cooker hood vent connection

Antenna connection

Vinkovci rooster

nexe
ROOF TILES

Valens 04

Valens, a flat roof tile with its attractive and modern design, gives a special style to modern buildings. It is particularly distinguished by its large movable area, which makes it suitable for refurbishments. Let the Nexe roof tile Valens be your tile of choice and achieve savings with an extended 50-year warranty. Anthracite or natural engobe? The choice is yours.

50 year warranty

04

EN 1304

Nail-holes	yes
Nail head rivets (mm)	cca 4x50
Average mass of roof tile (kg)	cca 4.5
Roof tile consumption per m2 of roof (piece)	cca 10
Roof load (kg/m2)	cca 45
Roof load (kN/m2)	cca 0.45
Coverage dimensions (mm)	cca 410x250
First batten placement – eaves (mm)	cca 350
Recommended gap between battens (mm)	cca 400
Minimum gap between battens (mm)	cca 360
Maximum gap between battens (mm)	cca 400
Recommended covering width (mm)	cca 250
Batten consumption (m'/m2)	cca 2.5
Counter batten consumption (m'/m2)	cca 1.4
Package – 4 rows (piece/pallet)	240
Roof tiles per package (piece)	5
Pallet dimensions (mm)	cca 1100x965
Package weight (kg)	cca 1100
Recommended roof slope	30°
Minimum roof slope	cca 24°
Minimum roof slope (with substructure)	cca 20°

Valens Natur Engoba

Valens Anthracite

Carski hip/ridge junction

Carski starter verge tile

Carski verge tile

Carski verge end cap

Carski ridge starter

Vent tile

Right verge tile

Left verge tile

Half a tile

Cooker hood vent connection

Antenna connection

Vinkovci rooster

nexe
ROOF TILES

Glinex Premium

05

Another high-quality Nexe model is Glinex Premium, an excellent roof tile for mainland areas, with a double roll and a nail hole. This model's biggest advantage is the possibility of sliding batten, making it a perfect choice for both newly built buildings and for refurbishing existing roofs. A large moving area and lighter roof load of just 39 kg/m2 make this model easy to apply and finally contribute to the construction savings.

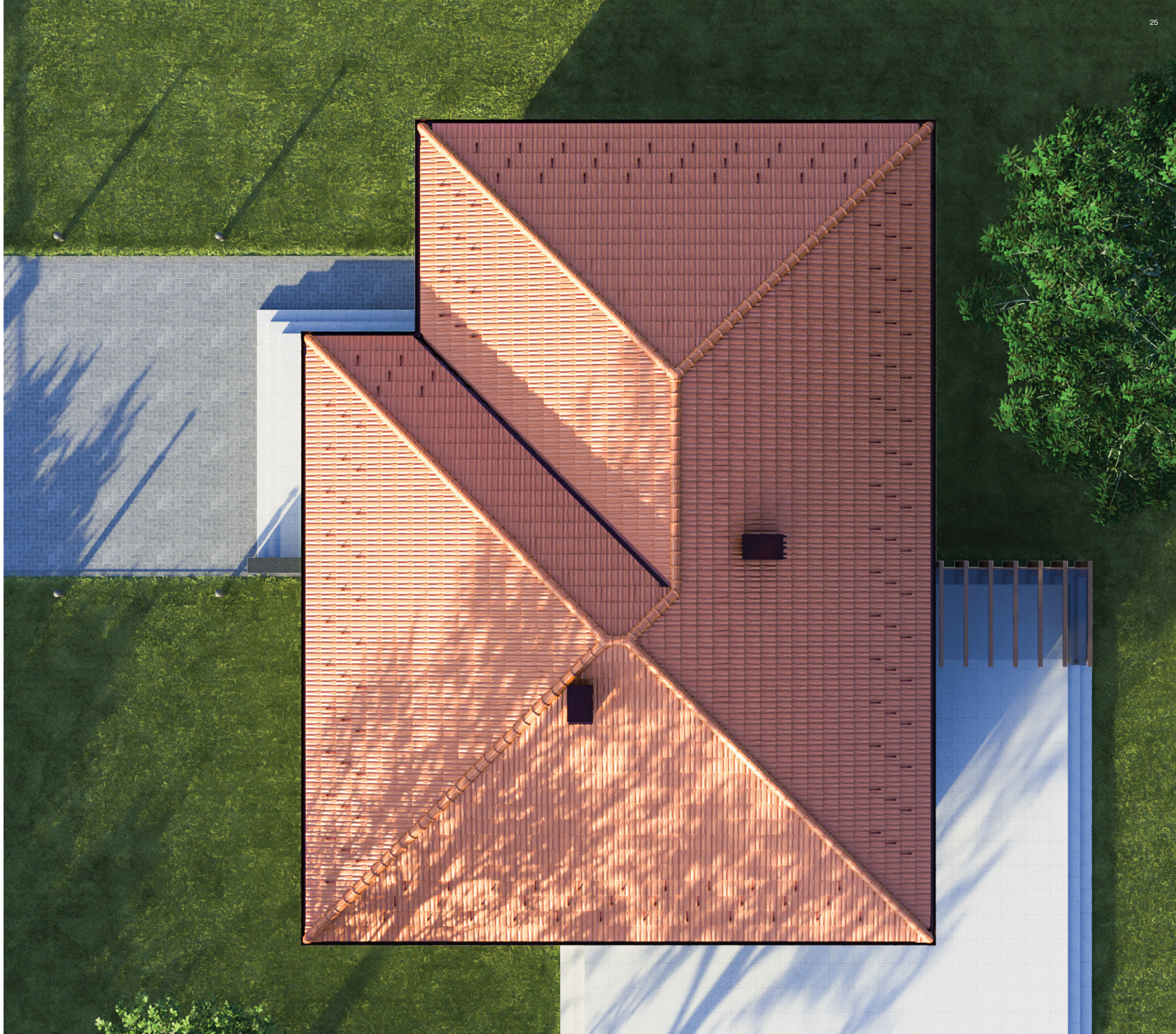

50 year warranty

05

Glinex Premium

EN 1304

Nail-holes	yes
Nail head rivets (mm)	cca 4x50
Average mass of roof tile (kg)	cca 3.10
Roof tile consumption per m2 of roof (piece)	cca 12.6
Roof load (kg/m2)	cca 39
Roof load (kN/m2)	cca 0.39
Coverage dimensions (mm)	cca 345x228
First batten placement – eaves (mm)	cca 320
Recommended gap between battens (mm)	cca 350
Minimum gap between battens (mm)	cca 330
Maximum gap between battens (mm)	cca 360
Recommended covering width (mm)	cca 228
Batten consumption (m'/m2)	cca 3.0
Counter batten consumption (m'/m2)	cca 1.4
Package – 4 rows (piece/pallet)	300
Roof tiles per package (piece)	6
Pallet dimensions (mm)	cca 1100x850
Package weight (kg)	cca 950
Recommended roof slope	30°
Minimum roof slope	cca 22°
Minimum roof slope (with substructure)	cca 17°

Glinex
hip/ridge junction

Glinex
starter verge tile

Glinex verge tile

Glinex
verge end cap

Glinex
ridge starter

Vent tile

Cooker hood
vent connection

Vinkovci rooster

nexe ROOF TILES

Glinex Kontinental 06

Among our models, we also offer the roof tiles Glinex Kontinental and Rustik. These are high-quality models, made for mainland areas, and have a double roll and a nail hole. Both are clay roof tiles with an average mass of 3.1 kg and consumption of 13 pieces per m2. Glinex enables a tolerance whilst embedding, and the recommended roof slope is 30 degrees. Together with Glinex Kontinental, we deliver all the additional roof building elements.

50 year warranty

06

EN 1304

Nail-holes	yes
Nail head rivets (mm)	cca 4x50
Average mass of roof tile (kg)	cca 3.1
Roof tile consumption per m2 of roof (piece)	cca 13
Roof load (kg/m2)	cca 40.3
Roof load (kN/m2)	cca 0.403
Coverage dimensions (mm)	cca 370x215
First batten placement – eaves (mm)	cca 320
Recommended gap between battens (mm)	cca 360
Minimum gap between battens (mm)	cca 355
Maximum gap between battens (mm)	cca 365
Recommended covering width (mm)	cca 215
Batten consumption (m'/m2)	cca 3.0
Counter batten consumption (m'/m2)	cca 1.4
Package – 4 rows (piece/pallet)	300
Roof tiles per package (piece)	6
Pallet dimensions (mm)	cca 1100x850
Package weight (kg)	cca 950
Recommended roof slope	30°
Minimum roof slope	cca 22°
Minimum roof slope (with substructure)	cca 17°

Glinex Kontinental

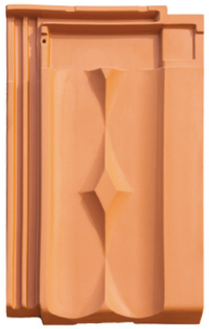

Glinex Rustik

Glinex hip/ridge junction

Glinex starter verge tile

Glinex verge tile

Glinex verge end cap

Glinex ridge starter

Vent tile

Cooker hood vent connection

Vinkovci rooster

nexe ROOF TILES

Mediteran 07

Mediteran is an ideal choice for the coastal area roofs, or for those exposed to the high winds. This model can be easily and quickly embedded in any roof because of the consumption of 13,2 pieces/m2 and the weight of 3.6 kg. This roof tile has high waves and excellent sealing characteristics (double seal system), which lowers the wind impact and, in that way, increases the construction stability.

There is a nail hole on every roof tile, which enables better attachment to the roofing batten. It is waterproof also on the really low roof slopes; therefore, this model can be used anywhere (with a minimum slope of 17°). You can choose from Natur an Antik colours, which makes the roof more attractive.

50 year warranty

07

Mediteran

Mediteran Antik A

Mediteran Antik B

Remark: Mediteran Antik tile comes in two shades, lighter and darker, and the package has an uneven number of lighter and darker pieces. To achieve harmony of shades, it is necessary to choose a tile from random pallets, and ''paint'' the roof surface according to your own vision to give your roof a special architectural value and uniqueness.

EN 1304

Nail-holes	yes
Nail head rivets (mm)	cca 4x50
Average mass of roof tile (kg)	cca 3.6
Roof tile consumption per m2 of roof (piece)	cca 13.2
Roof load (kg/m2)	cca 47.6
Roof load (kN/m2)	cca 0.476
Coverage dimensions (mm)	cca 360x210
First batten placement – eaves (mm)	cca 320
Recommended gap between battens (mm)	cca 350
Minimum gap between battens (mm)	cca 350
Maximum gap between battens (mm)	cca 355
Recommended covering width (mm)	cca 210
Batten consumption (m'/m2)	cca 3.0
Counter batten consumption (m'/m2)	cca 1.4
Package – 4 rows (piece/pallet)	240
Roof tiles per package (piece)	6
Pallet dimensions (mm)	cca 1100x850
Package weight (kg)	cca 890
Recommended roof slope	30°
Minimum roof slope	cca 22°
Minimum roof slope (with substructure)	cca 17°

Glinex hip/ridge junction

Glinex starter verge tile

Glinex verge tile

Glinex verge end cap

Glinex ridge starter

Vent tile

Under-verge tile

Cooker hood vent connection

Antenna connection

Vinkovci rooster

nexe ROOF TILES

Kupa Marea 08

Kupa Marea is a top-quality tile, designed to meet the highest standards of modern construction. Specially designed for coastal areas, the Kupa Marea combines a rich tradition with advanced technological solutions and modern achievements. The sophisticated design of the "wave", in addition to aesthetic value, also provides functional superiority that brings superior protection, ensuring resistance to strong gusts of wind.

Specially developed for demanding weather conditions in areas where rain is carried by the wind, Kupa Marea stands out with a double sealing system, which ensures complete watertightness and long-term protection of the roof substructure. Moreover, the possibility of sliding slats makes this tile an optimal choice for both new construction and reconstruction of existing roofs, as it allows for quick and easy installation.

In addition to the natural colour of the tiles, your roof can also be adorned with our Antik colour, which will give additional beauty and charm to any roof with a lighter and darker pattern.

50 year warranty

08

Kupa Marea

Kupa Marea Antik A

Kupa Marea Antik B

Remark: The Kupa Marea Antik tile comes in two shades, lighter and darker, and there is an unequal number of light and dark pieces in the package. To achieve the harmony of shades, it is necessary to randomly choose a tile from several palettes and "intersperse" the roof surface according to your own vision, to give your roof a special architectural value and uniqueness.

EN 1304

Nail-holes	yes
Nail head rivets (mm)	cca 4x50
Average mass of roof tile (kg)	cca 3.7
Roof tile consumption per m2 of roof (piece)	cca 14
Roof load (kg/m2)	cca 52
Roof load (kN/m2)	cca 0.52
Coverage dimensions (mm)	cca 350x200
First batten placement – eaves (mm)	cca 320
Recommended gap between battens (mm)	cca 350
Minimum gap between battens (mm)	cca 335
Maximum gap between battens (mm)	cca 360
Recommended covering width (mm)	cca 200
Batten consumption (m'/m2)	cca 3.0
Counter batten consumption (m'/m2)	cca 1.4
Package – 4 rows (piece/pallet)	240
Roof tiles per package (piece)	6
Pallet dimensions (mm)	cca 1150x940
Package weight (kg)	cca 910
Recommended roof slope	30°
Minimum roof slope	cca 22°
Minimum roof slope (with substructure)	cca 17°

Glinex
hip/ridge junction

Glinex
starter verge tile

Glinex verge tile

Glinex
verge end cap

Glinex
ridge starter

Vent tile

Under-verge tile

Cooker hood
vent connection

Antenna connection

Vinkovci rooster

nexe ROOF TILES

Biber 09

Biber roof tile, as one of the oldest tile models in history, with its simple appearance, provides various possibilities in designing projects.

It is often used in the renovation of the roofs of old traditional buildings that represent significant cultural heritage. Last but not least, Biber roof tile has its place in contemporary architecture.

Thanks to its simple and classic shape, it can be used as a decoration to highlight smaller areas or to cover entire roof planes. This model of tile is made using the technology of drawing, not pressing, from high-quality clay.

50 year warranty

Biber

09

EN 1304

Nail-holes	yes
Nail head rivets (mm)	cca 4x50
Average mass of roof tile (kg)	cca 2.0
Roof tile consumption per m2 of roof (piece)	cca 30.4 - 36
Roof load (kg/m2)	cca 61
Roof load (kN/m2)	cca 0.61
First batten placement – eaves (mm)	270
Recommended gap between battens double coverage (mm)	150 - 170
Recommended gap between battens crown coverage (mm)	300 - 310
Minimum gap between battens (mm)	cca 150
Maximum gap between battens (mm)	cca 310
Batten consumption (m'/m2)	6.25
Counter batten consumption (m'/m2)	2
Package – 4 rows (piece/pallet)	560
Roof tiles per package (piece)	28
Pallet dimensions (mm)	900x1000
Package weight (kg)	cca 1140
Recommended roof slope	30°
Minimum roof slope	30°
Minimum roof slope (with substructure)	30°

Glinex hip/ridge junction

Glinex starter verge tile

Glinex verge tile

Glinex verge end cap

Glinex ridge starter

NEXE
KROV PLUS

Metal snow guard

Clip for groove
(Glinex, Carski)

Ridge - ridge tape
(300 mm, 390 mm)

Roofing foil
(140 g, 170 g)

Perforated Ventilation Tape

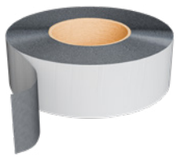

Diffuse adhesive tape

Wedge-shaped gasket

Grid for the drip tray

Cold
Engobe (0.25 l)

Ridge retainer - ridge slats

Clip for the
first row of tiles

Wind buckle

Finishing perforated
tile for gutter

NEXE KROV PLUS roof equipment allows natural air flow under the tile, which makes the roof breathe. Complete roof equipment ensures permanent protection, proper function and a long service life of the roof. **By constructing the roof with Nexe tiles and original NEXE KROV PLUS roof equipment you get an extended warranty of 40+10 years.**

CARSKI GROOVE

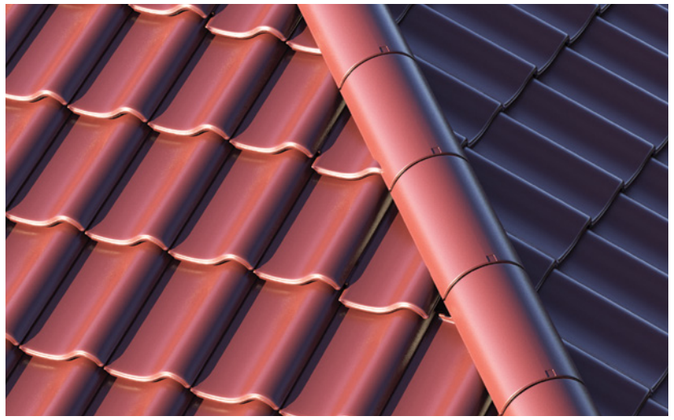

EN 1304

Nail hole	yes
Riveting nail (mm)	cca 4x50
Average tile weight (kg)	cca 3.80
Tile consumption per m of roof (pcs)	cca 2.5
Coverage dimensions (mm)	cca 405x235
Packing 4 rows (pcs/pallet)	108
Pallet dimensions (mm)	cca 1020x850
Package weight (kg)	cca 440

CARSKI

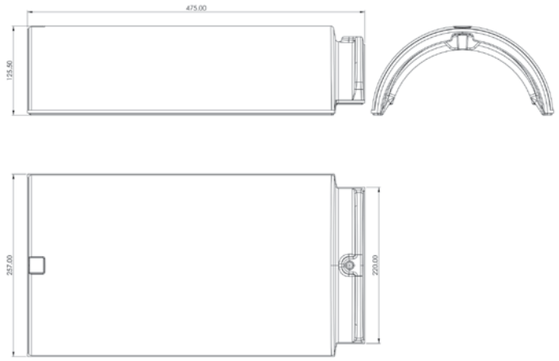

GLINEX

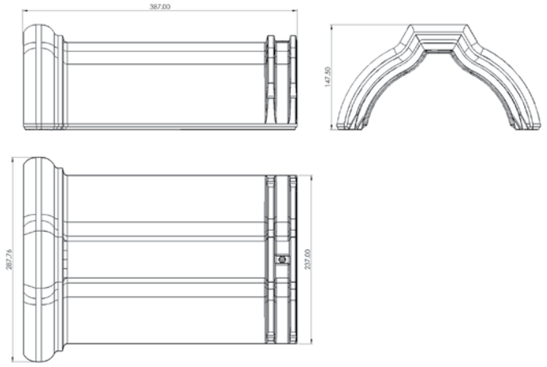

GLINEX GROOVE

EN 1304

Nail hole	yes
Riveting nail (mm)	cca 4x50
Average tile weight (kg)	cca 3.30
Tile consumption per m of roof (pcs)	cca 3
Coverage dimensions (mm)	cca 340x200
Packing 4 rows (pcs/pallet)	180
Pallet dimensions (mm)	cca 1118x850
Package weight (kg)	cca 680

PROPER ROOF LATHING — **AURELIUS**

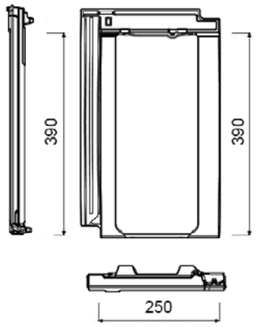

COVERING DIMENSION

Lenght: 390 mm
Width: 250 mm

THE TEMPLATE FOR BATTENS
(Two identical pieces always have to be made)

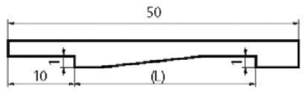

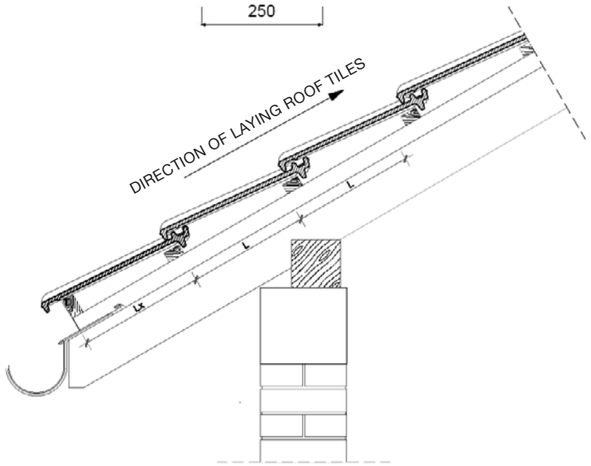

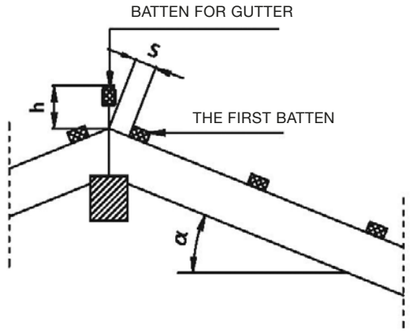

recommended gap between battens (mm) L= 400	roof slope « a »	20°	30° 40°
recommended space for the first batten (mm) Lx= 350	position of the first batten « s »	80 mm	50 mm 40 mm
	position of the batten for gutter « h »	105 mm	85 mm 85 mm

SPECIFYING THE SPACE BETWEEN THE BATTENS ACCORDING TO THE NORM
- Take 12 roof tiles that serve as random samples at the construction site.
- Line up the roof tiles that you have taken on the flat surface (concrete or board) face down.
- Measure the space between 10 roof tiles when they are lined up broadly (L1) and then when lined up densely (L2).

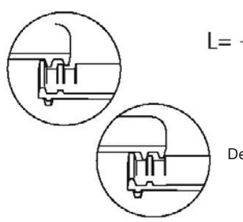

$$L = \frac{L1 + L2}{20} \text{ (mm)}$$

PROPER ROOF LATHING — **CEZAR**

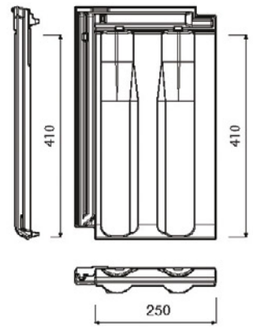

COVERING DIMENSION

Lenght: 410 mm
Width: 250 mm

THE TEMPLATE FOR BATTENS
(Two identical pieces always have to be made)

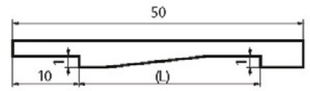

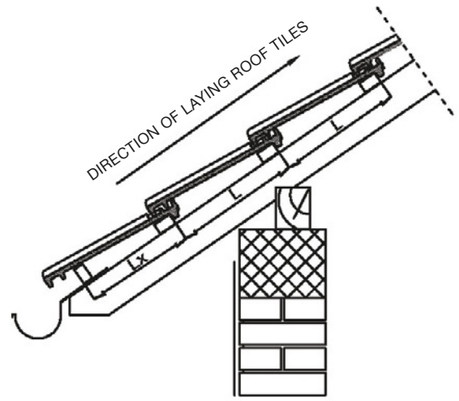

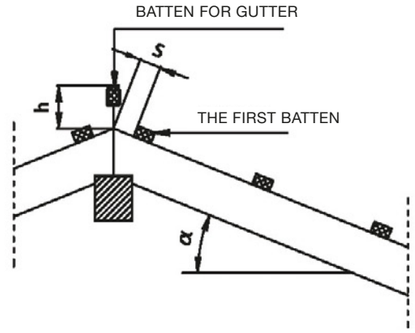

recommended gap between battens (mm) L= 400	roof slope « a »	20°	30° 40°
recommended space for the first batten (mm) Lx= 350	position of the first batten « s »	80 mm	50 mm 40 mm
	position of the batten for gutter « h »	105 mm	85 mm 85 mm

SPECIFYING THE SPACE BETWEEN THE BATTENS ACCORDING TO THE NORM
- Take 12 roof tiles that serve as random samples at the construction site.
- Line up the roof tiles that you have taken on the flat surface (concrete or board) face down.
- Measure the space between 10 roof tiles when they are lined up broadly (L1) and then when lined up densely (L2).

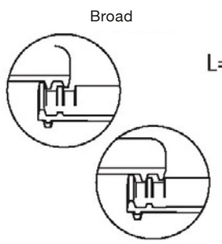

$$L = \frac{L1 + L2}{20} \text{ (mm)}$$

PROPER ROOF LATHING — **OKTAVIJAN**

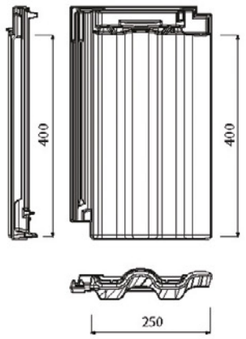

COVERING DIMENSION

Lenght: 400 mm
Width: 250 mm

THE TEMPLATE FOR BATTENS
(Two identical pieces always have to be made)

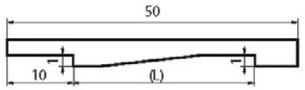

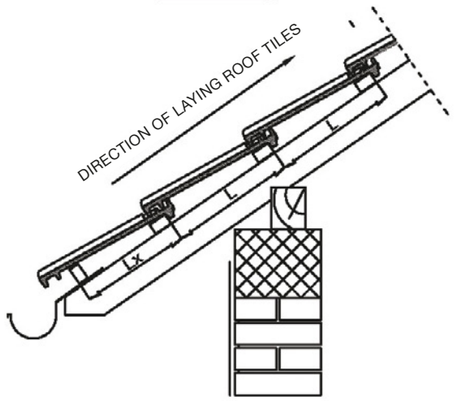

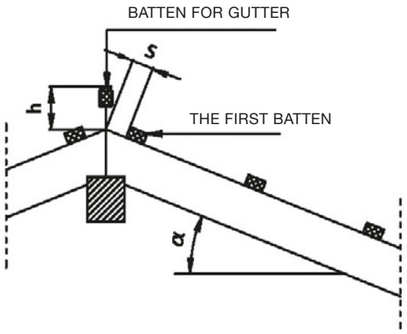

recommended gap between battens (mm)	L= 400		
recommended space for the first batten (mm)	Lx= 350		

roof slope « a »	20°	30°	40°
position of the first batten « s »	60 mm	50 mm	40 mm
position of the batten for gutter « h »	115 mm	95 mm	85 mm

SPECIFYING THE SPACE BETWEEN THE BATTENS ACCORDING TO THE NORM
- Take 12 roof tiles that serve as random samples at the construction site.
- Line up the roof tiles that you have taken on the flat surface (concrete or board) face down.
- Measure the space between 10 roof tiles when they are lined up broadly (L1) and then when lined up densely (L2).

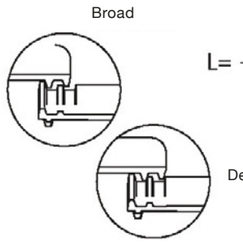

$$L = \frac{L1 + L2}{20} \text{ (mm)}$$

PROPER ROOF LATHING — **VALENS**

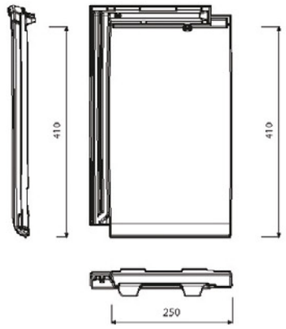

COVERING DIMENSION

Lenght: 410 mm
Width: 250 mm

THE TEMPLATE FOR BATTENS
(Two identical pieces always have to be made)

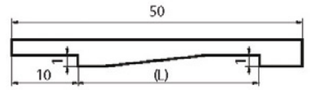

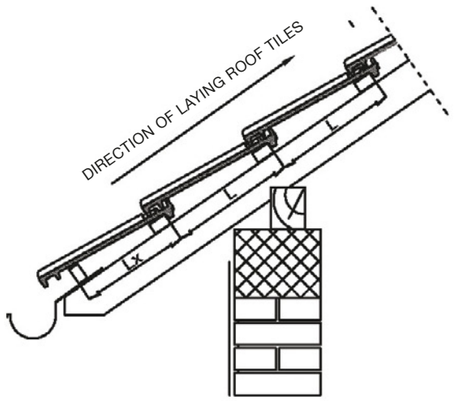

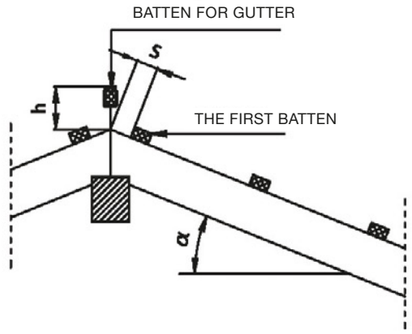

recommended gap between battens (mm)	L= 400		
recommended space for the first batten (mm)	Lx= 350		

roof slope « a »	20°	30°	40°
position of the first batten « s »	80 mm	50 mm	40 mm
position of the batten for gutter « h »	105 mm	85 mm	85 mm

SPECIFYING THE SPACE BETWEEN THE BATTENS ACCORDING TO THE NORM
- Take 12 roof tiles that serve as random samples at the construction site.
- Line up the roof tiles that you have taken on the flat surface (concrete or board) face down.
- Measure the space between 10 roof tiles when they are lined up broadly (L1) and then when lined up densely (L2).

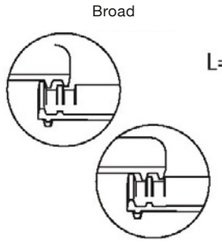

$$L = \frac{L1 + L2}{20} \text{ (mm)}$$

PROPER ROOF LATHING — **GLINEX PREMIUM**

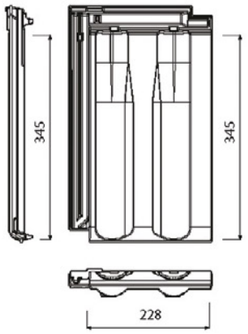

COVERING DIMENSION

Lenght: 345 mm
Width: 228 mm

THE TEMPLATE FOR BATTENS
(Two identical pieces always have to be made)

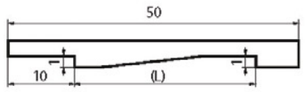

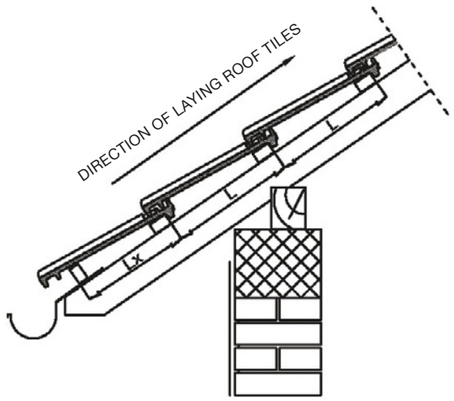

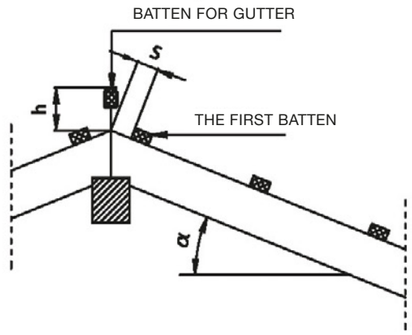

recommended gap between battens (mm) L= 350

recommended space for the first batten (mm) Lx= 310

roof slope « a »	20°	30°	40°
position of the first batten « s »	60 mm	50 mm	40 mm
position of the batten for gutter « h »	110 mm	90 mm	85 mm

SPECIFYING THE SPACE BETWEEN THE BATTENS ACCORDING TO THE NORM
- Take 12 roof tiles that serve as random samples at the construction site.
- Line up the roof tiles that you have taken on the flat surface (concrete or board) face down.
- Measure the space between 10 roof tiles when they are lined up broadly (L1) and then when lined up densely (L2).

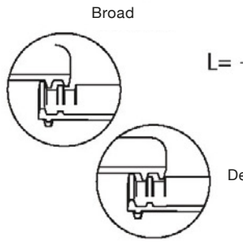

$$L = \frac{L1 + L2}{20} \text{ (mm)}$$

PROPER ROOF LATHING – **GLINEX KONTINENTAL/RUSTIK**

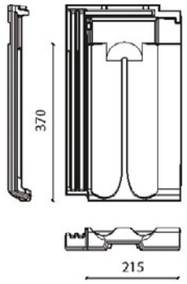

COVERING DIMENSION

Lenght: 370 mm
Width: 215 mm

THE TEMPLATE FOR BATTENS
(Two identical pieces always have to be made)

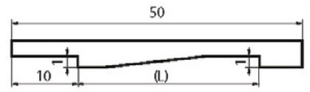

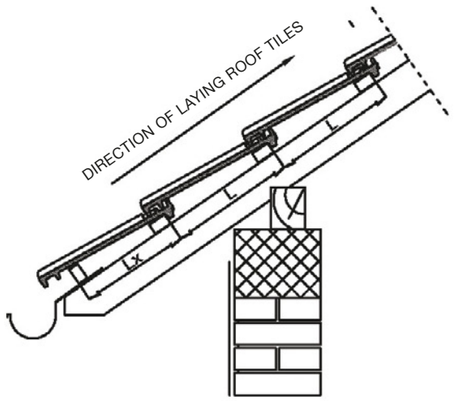

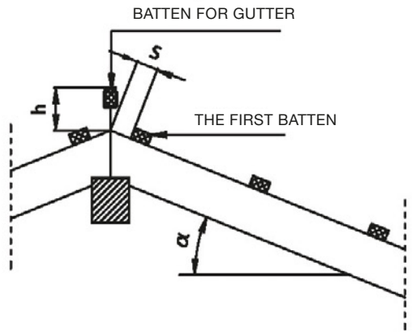

recommended gap between battens (mm) L= 360

recommended space for the first batten (mm) Lx= 320

roof slope « a »	20°	30°	40°
position of the first batten « s »	50 mm	40 mm	30 mm
position of the batten for gutter « h »	110 mm	90 mm	85 mm

SPECIFYING THE SPACE BETWEEN THE BATTENS ACCORDING TO THE NORM
- Take 12 roof tiles that serve as random samples at the construction site.
- Line up the roof tiles that you have taken on the flat surface (concrete or board) face down.
- Measure the space between 10 roof tiles when they are lined up broadly (L1) and then when lined up densely (L2).

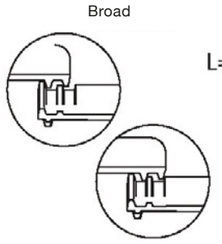

$$L = \frac{L1 + L2}{20} \text{ (mm)}$$

PROPER ROOF LATHING — **MEDITERAN**

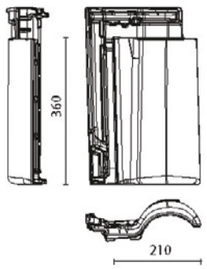

COVERING DIMENSION

Lenght: 360 mm
Width: 210 mm

THE TEMPLATE FOR BATTENS
(Two identical pieces always have to be made)

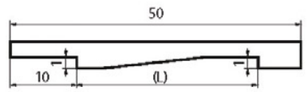

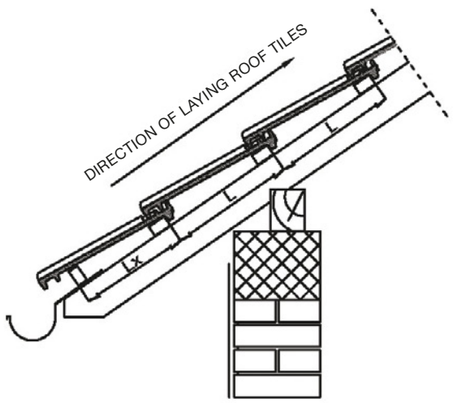

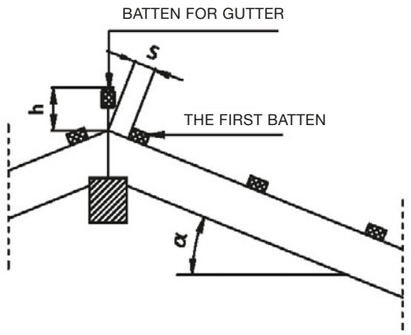

recommended gap between battens (mm)	L= 350
recommended space for the first batten (mm)	Lx= 320

roof slope « a »	20°	30°	40°
position of the first batten « s »	50 mm	40 mm	50 mm
position of the batten for gutter « h »	135 mm	130 mm	115 mm

SPECIFYING THE SPACE BETWEEN THE BATTENS ACCORDING TO THE NORM
- Take 12 roof tiles that serve as random samples at the construction site.
- Line up the roof tiles that you have taken on the flat surface (concrete or board) face down.
- Measure the space between 10 roof tiles when they are lined up broadly (L1) and then when lined up densely (L2).

Broad

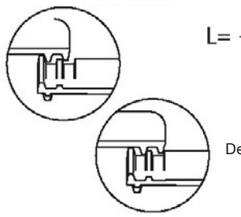

$$L = \frac{L1 + L2}{20} \text{ (mm)}$$

Dense

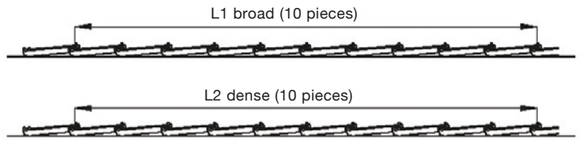

PROPER ROOF LATHING — **KUPA MAREA**

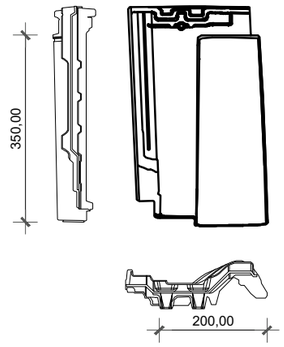

COVERING DIMENSION

Lenght: 350 mm
Width: 200 mm

THE TEMPLATE FOR BATTENS
(Two identical pieces always have to be made)

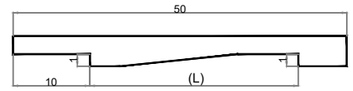

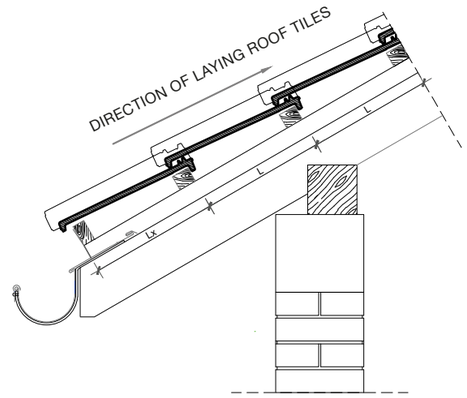

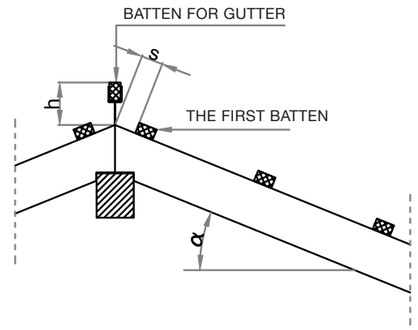

recommended gap between battens (mm)	L= 350
recommended space for the first batten (mm)	Lx= 320

roof slope « a »	20°	30°	40°
position of the first batten « s »	50 mm	40 mm	50 mm
position of the batten for gutter « h »	135 mm	130 mm	115 mm

SPECIFYING THE SPACE BETWEEN THE BATTENS ACCORDING TO THE NORM
- Take 12 roof tiles that serve as random samples at the construction site.
- Line up the roof tiles that you have taken on the flat surface (concrete or board) face down.
- Measure the space between 10 roof tiles when they are lined up broadly (L1) and then when lined up densely (L2).

Broad

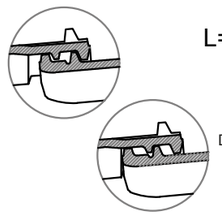

$$L = \frac{L1 + L2}{20} \text{ (mm)}$$

Dense

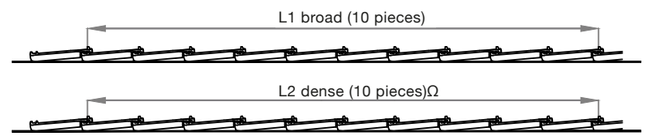

PROPER ROOF LATHING1 — **BIBER**

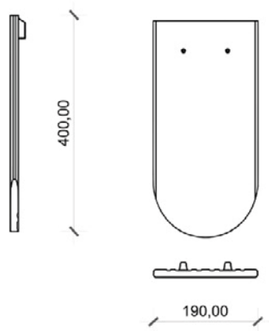

COVERING DIMENSION

Lenght: 400 mm
Width: 190 mm

THE TEMPLATE FOR BATTENS
(Two identical pieces always have to be made)

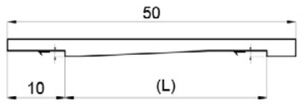

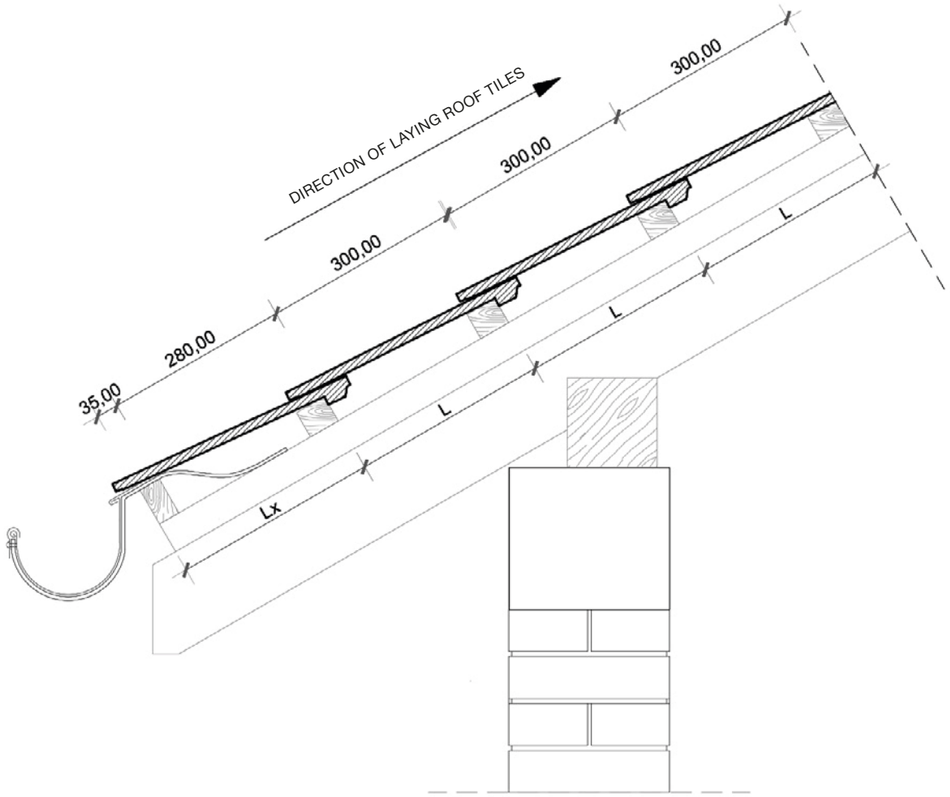

50 Jahre Garantie

WARRANTY

for roof tiles: _____

bought on: _____ in: _____

(name, place and stamp of the company)

for usage on object: _____

(address)

with receipt number: _____

buyer: _____

(first name and surname)

40+10 YEAR-LONG WARRANTY

1. **DILJ Ltd. VINKOVCI** guarantees that the delivered roof tiles will in mentioned period of 40 years fulfill all the requirements of European norms for clay roof tiles: **HR EN 1304.**

2. If the roof tiles within the mentioned period and due to the weather conditions wouldn't serve as covering, **DILJ Ltd. VINKOVCI** would be obliged to replace the roof tiles with the new ones if there were proofs that the roof tiles didn't fulfill the requirements of European norms for clay roof tiles.

3. The warranty does not count in the case of a mechanical damage that was made due to e.g. natural disaster.

4. The warranty counts only when the following conditions are fulfilled:
   - the roof construction was performed by professionals and it is done appropriately and according to the instructions of the producer
   - the roof aeration was performed according to the instructions of the producer
   - the complaint was done in a written form and there is: the date of buying the product, roof tile model, place of embedding the product, type and the extent of damage and there are also the copy of receipt and the warranty paper attached to it
   - the person that made the complaint allows the representor of the producer to inspect the damaged roof tiles without interruption

5. **Warranty 40 + 10 years** counts only when the following conditions are fulfilled:
   - all that is stated in 1,2,3, and 4
   - the roof is constructed according to ventilated roof system and the original roof equipment **NEXE KROV PLUS**
   - the special roof tiles were used on the roof

6. Warranty is being counted from the delivery day.

DILJ Ltd. VINKOVCI
Ciglarska ul. 33, 32100 Vinkovci
Tél. : +385(0)32 337 166 e-mail : dilj@nexe.hr

nexe ROOF TILES

09/25

nexe

ROOF TILES

DILJ Ltd. VINKOVCI
Ciglarska ul. 33, 32100 Vinkovci
Tél. : +385(0)32 337 166, e-mail : dilj@nexe.hr
www.nexe.hr